E&L ELECTRIC MOTORS

Electric Motor & Generator Rebuilding & Rewinding






Serving Industry Since 1959

About E & L Electric, Inc.

E & L Electric was originally started by husband and wife Everett & Emma Lee Fitch back in 1959. Everett worked for a motor shop in Los Angeles named Larsen Hoag as a motor winder from 1950-1961 while Emma worked for the same company from1957-1959, also as a winder.

The story goes that Emma was winding as fast as Everett but they would only pay here half of what Everett was making. When she went to ask for a raise they refused, Emma quit, and E & L Electric was born. E & L Electric started out of a garage in South Gate, CA, then moved to the corner which was about 1000 square feet and later two doors down to a 3000 square foot building where they stayed until 1998. Emma, or "Lee" as she was known, usually worked ten hours days and trained countless motor winders that are still working in the industry today, two of them right here at E & L Electric. She was very active in the Electrical Apparatus Service Association, EASA® as was Everett. The picture on the bottom right is Lee stripping an armature, with a torch, in her slippers, somewhere in her late seventies. She passed away in 1993 and worked, not because she had to, but because she loved to.

After moving to Santa Fe Springs in 1998 the grandson of Everett & Emma took over the day to day operations and is now the President of E & L Electric, Inc. We are fortunate enough to not only have two of the original motor winders from the 1970's we also have a close to zero turnover rate over the last 15 years.

Starting out as a contract shop we primarily wound armatures for other motor shops all over the United States and that still remains a small part of our business. Today however we are a full service motor and generator repair shop that has some of the finest testing and processing equipment available to date. While constantly investing in the company and our crew we are always looking for ways to improve as dictated by the needs of our customers.

We are currently located in Santa Fe Springs with a property we acquired in 2005. In 2009 we made a decision to modernize the shop and offices and start acquiring the finest support equipment and services available in our industry.

2009

- We opened our servo motor department and purchased the necessary equipment and software to repair and rewind AC brushless servo motors for the aerospace and automation industry.

2010

- Stingray automated closed loop steam cleaner
- Training Center used for technical seminars, safety meetings, and staff meetings.

2011

- SFK-Baker AWA Motor Analyzer– 12000 Volt
- Steelman Curing Oven W 24 Hour Partlow Chart Recorders
- Dyna Bal Computerized Balancer
- Lexseco Computerized Core Loss Tester
- UL Listing; we received our UL Certification allowing us to rebuild and rewind explosion proof UL Listed motors

2012

- Service Center Bridge Crane
- Various Jib Cranes throughout the service shop

2013

- Imprex VPI –Vacuum Pressure Impregnation System
- AW Dynamometer— Load Tester
- Jenkins 0-4160 Volt Computerized Motor Test Center W/ Vibration and Temperature Sensors

Motor & Generator Repair

Quality Repairs

Materials

Only the finest materials and parts are used during the repair process and we will always meet or exceed the manufactures original specifications. Nomex® insulation and Ultra Shield Inverter Duty magnet wire as well specially designed form coils are at the core of our motor rewinds. Using only genuine Koyo, Nachi, SKF, or other top of the line bearings and never purchased from any sources other than authorized distributors.

Processing

The moment a unit comes in for repair it is tagged, all nameplate information is recorded, unit is stamped with an internal work order number and has a minimum of four pictures taken. All information is then logged in to our computer network to start the repair process.

Information from the customer is the key to a successful repair. Why was the unit brought in? what type of delivery is needed? Application?, and accessories that may not have been received that might be required for proper final testing. The unit is then scheduled in our custom built computer program and assigned to a technician.

Initial Inspection

Our four page inspection report is crucial to make sure that the unit is repaired properly and returned by the deadline required by our customers. Including a full range of electrical tests, bearing fits measured, mechanical fits, missing or broken parts, and shaft run out are standard on every repair. All windings, if possible, have incoming electrical test preformed and recorded. If applicable the windings are sent to our environmentally friendly steam cleaner and baked dry for second stage electrical testing. All parts are cleaned and inspected for possible damage, wear, and cracks and all old grease is removed and purged from grease tubes and fittings. The card is now returned to the shop office for rescheduling after the clean and bake process.

Electrical Testing

Once the windings are baked out they are put through a five stage electrical test on a annually calibrated SKF® AWA Motor Analyzer. If the windings fail electrical testing and a rewind is required the stator core is tested with a computerized core loss tester. This core loss test is key to the rewind process and to ensure that the motor will retain its manufacturers efficiency levels. This test is preformed prior and after the removal of the old windings.

Final Assembly

By the time your unit reaches the assembly stage the complete rotating assembly has been balanced to precision levels, all parts have been cleaned and prepped, and new replacement parts have been pulled and placed in a clean box not on the shop floor or motor pan. After the unit is assembled it is tested for specific time period based on the size of the motor. At this time all data is recorded automatically through our computerized motor test center.

Ready To Ship

Once the unit has passed all electrical tests it is sent for a final inspection that includes verification of the connection as received, accessories have been installed, and numerous other tests both electrical and visual inspections. The unit is now sent to be painted and brought to shipping where a last and final inspection is done, a protective shaft sleeve is installed, a outgoing photo or photos are taken, and manager signs off and approves for shipping.

Equipment

Testing & Processing

0-4160 Volt Computerized Test Center - July 2013
Custom designed test panel capable of testing AC, DC, and Synchronous motors. All data is automatically recorded while testing that includes voltage, current, vibration levels, and bearing temperature.

SKF® Baker AWA Computerized Winding Analyzer—2011 - Calibrated Annually

The AWA integrates a wide range of electrical tests which meet high quality standards. This instrument supports all major electric tests in a single portable unit including surge, polarization index, DC HiPot, MegOhm and winding resistance. All data is automatically recorded and complete MS Word or PDF reports can be generated and submitted at the customers request and is standard with all motor repairs and new sales over 100 HP. During the repair process the AWA is used at all stages of the repair and guarantees the condition of the insulation.

Lexseco® Core Loss Tester - 2011 - Calibrated Annually

Our core loss tester is a fully automated high current, low voltage test center designed specifically for testing rotors, stators, and armatures. The core loss tester provides documentation of the rebuild and manufacturing process by automatically generating customized reports detailing core performance. All motors rewound are tested both before and after the winding is removed from the core to confirm that the unit is returned at the efficiency levels required. In addition to testing the integrity of the core the Lexseco is specially designed to verify the winding data.

Steelman Curing Oven With 24 Hr Partlow Chart Recorders - 2011

Proper curing time depends on the many factors that include type of resin, size of unit, and what was work was performed. The chart recorder allows us to monitor the baking time and temperature for units that are baked over night. This step is a crucial step to ensure that windings have been thoroughly baked and cured. In addition to the chart recorder the oven has three separate safety shutoffs in the event that the oven malfunctions the unit curing will not be over baked causing damage to the windings or core.

Calibrated Measuring devices
Quality can only be achieved by having the proper measuring tools and equipment. In addition to having the equipment calibrated, E & L Electric also calibrates on a annual basis critical machine shop tooling and micrometers, torque wrenches, and electronic meters. As a UL® Listed company we are certified to repair and rewind motors in explosion proof areas. All of our calibrations meet or exceed the mandated requirements set by UL® and are inspected by UL® agent on a annual basis.

Computer Controlled Network
E & L Electric uses custom designed software for controlling every aspect of a repair and sale. Designed by the owner of E & L Electric it allows us to make modifications as required by changes in the industry, customers needs such as special reports, and customized processing screen. A customer can call a month later or ten years later and get a complete description of what work was done, parts installed, copy of invoices or quotes.

Test Reports - Winding Analyzer

Motor ID	Time	Temp	Resist	Megohm	DA/PI	DC	Surge
223451	8/14/2013 2:01:50 AM	Tested	PASS	PASS	PASS	PASS	PASS

Nameplate Information		Motor ID Rogers Equipment Loaner	
Location	E & L Electric	Building	12322
Model	1-5110-19625-1-1	Manufacturer	Siemens
Serial Number	A4757HFY7649	HP/KW	900
Volts-Rating	4160	Volts-Operating	4160
Amps-Rating	126	Amps-Operating	
Insulation	F	Enclosure	WPII
RPM	1780	Service Factor	1.15
Frame	588US	Freq-Hz	60
Notes	ROTOR IN	LR Amps	
NEMA Design		Max Amb °C	0
NEMA nom eff	0	Duty Cycle	
Manuf's Type		Manuf Dt Cd	

Results Summary		Test Date/Time 8/14/2013 2:01:50 AM	
Test ID:	AC-Recon-3 Ph-4160-W/R	Repair/Job #	223451
Tested By	Chuck Briceno	Tested For	Shop
Room #	Shop	MCC	N/A
Location	E & L Electric	Building	12322
Temp Status	**Tested**	**PI Status**	**PASS**
Temp	26.4°C 79.5°F RH 53%	Volts (V)	5000
Resist Status	**PASS**	DA Ratio	1.9
L1-L2 (Ohms)	0.345 Corr: 0.343	PI Ratio	2.4
L2-L3 (Ohms)	0.347 Corr: 0.345	**HiPot**	**PASS**
L3-L1 (Ohms)	0.347 Corr: 0.345	Volts (V)	9000
Max Delta R %	0.680	I(µA)	1.70
Coil 1 (Ohms)	0.172 Corr: 0.171	Resist (Mohm)	5294 At 40°C 2060
Coil 2 (Ohms)	0.172 Corr: 0.172	**Surge Status**	**PASS**
Coil 3 (Ohms)	0.174 Corr: 0.174	Peak Volt(V) L1	9000
Megohm Status	**PASS**	Peak Volt(V) L2	9000
Volts (V)	5000	Peak Volt(V) L3	9000
I(µA)	1.00	Max P-P EAR(%)	2.7/2.0/2.1
Resist (Mohm)	5000 At 40°C 1946	EAR 1-2/2-3/3-1(%)	No Test

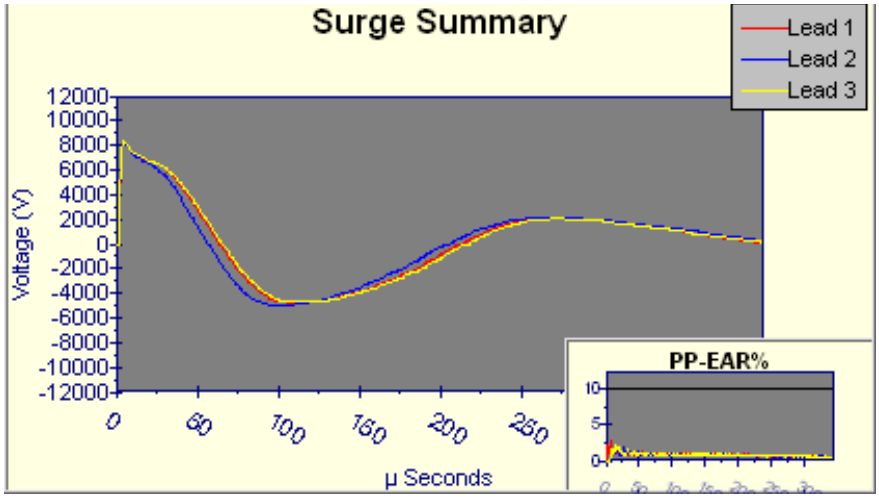

Test Reports - Balance

Computerized Dynamic Balancing Report

Date:10-22-12
6/21/2012

Time: 2:38:55
PM

Operator: R. Alvis
Job no.: 21770
P. O. no.:22134

Customer: Triumph Group- Chatsworth

Two Plane Balance
Item balanced:
Balancing specification: Nema & Dyna-Bal
Item operating speed: 3150.00 RPM
NEMA Spec: 0.30 mil
Balancing RPM: 560.85

Balance Conditions

	Start		Finish		
Right End	Mils:	0.40	Mils:	0.12	in/s: 0.003
	Angle:	52.50	Angle:	93.77	
Left End	Mils:	0.35	Mils:	0.03	in/s: 0.001
	Angle:	353.10	Angle:	349.65	

Beginning unbalance:	2.945 g-in,	0.104 oz-in Right Side
	7.562 g-in,	0.267 oz-in Left Side
Residual unbalance:	2.31 g,	0.08 oz Right Side
	1.79 g,	0.06 oz Left Side
This item is balanced to:	3.466 g-in,	0.122 oz-in Right Side
	2.687 g-in,	0.095 oz-in Left Side

Key Used

Drive End:	0.31 in wide x	0.27 in thick x	0.75 in long
Rear End:	0.00 in wide x	0.00 in thick x	0.00 in long

Test Reports - Core Loss

Stator Core Loss Test Report

Core Test: 10/15/13 02:52:09 PM
HotSpot Test: 10/15/13 02:54:31 PM
Customer: BUENA PARK COLD STORAGE
Job 22579
Phase: Preburnout
Technician: RUDY SORTO
Report Date: 10/15/13 03:00:38 PM

E&L Electric
12322 Los Nietos Rd

Santa Fe Springs
Ca 90670
PH:

Tested with Lexseco Model:2025E

Nameplate Data

Description.....	STATOR	Frame.....	445TS
Manufacturer....	SIEMENS	Frame Type.....	T FRAME HIGH EFFICIENCY
Rated Power.....	250.00 HP	Temp. Amb.....	0
Speed.....	3575	Duty Cycle.....	
Rated Voltage...		Serial #.....	
Rated Current...		Model.....	
Phase.....		Style.....	
Frequency.....	60	Attachments.....	
Enclosure.....		Insul. Class....	
Rated Efficiency	0.00		

Dimensions

Core Length.....	12.250	Slot Depth.....	1.405	
Core Inner Dia.	10.500	# Ducts/Width...	0	0.000
Back Iron Depth.	2.155	# Holes/Diameter	0	0.000

CoreLoss Data

Test Setup

Target Tap..... 12.5 Actual Tap..... 12.5 Target Flux..... 2086

Meter Data

Flux..... 2046.000 Amps..... 530.000 Watts..... 2640.000

Results

Loss,Watts/lb... 8.019 Maximum Limit... 6.500
BackIron Flux... 83337 Marginal Limit.. 4.500 Used Dual Cables... No

Recommendations

Coreloss is TOO HIGH. Take corrective steps and retest or reject.Check for and mark hot spots by raising amps to between 1060 and 1590. Correct the marked areas and retest.

Notes

Hot Spot Data

Test Setup

Target Tap..... Target Amp Range 1060 to 1590

Results

Actual Amps..... 1077.0 Duration,secs... 120

Test Reports - Assembled Unit

E&L Electric Motors
DC Equipment Test Report

Report Name: OKONITE_22348_2013-08-29_14'04'47.xls
Start Date: 8/29/2013 Start Time: 2:04:47 PM Temp Vib

Cust Name: OKONITE Job No: 22348
Manufacturer: G.E. DC MOTOR Model No: 5CD226TA001B001
Volts: 500 Amps: 631 Serial No: ND-1-370ND
Fld Volts: 300 Fld Amps: 8.2
HP: 400 KW: 298.4 RPM: 1150

Technician: AFIF
Comments: CW

Date	Time	Arm V	Arm A	Field V	Field A	KW in			
8/29/2013	2:04:48 P	500.1	12.7	303.7	8.5	8.9			
8/29/2013	2:05:48 P	502.2	12.5	302.2	8.4	8.8			
8/29/2013	2:06:48 P	505.2	12.7	303.5	8.4	9.0			
8/29/2013	2:07:48 P	506.3	12.8	304.1	8.4	9.0			
8/29/2013	2:08:48 P	505.9	12.7	303.7	8.3	8.9			
8/29/2013	2:09:48 P	505.6	12.8	303.7	8.3	9.0			
8/29/2013	2:10:48 P	503.2	12.7	302.3	8.2	8.9			
8/29/2013	2:11:48 P	504.8	12.7	303.5	8.2	8.9			
8/29/2013	2:12:48 P	504.8	12.7	303.7	8.2	8.9			
8/29/2013	2:13:48 P	504.3	12.9	303.4	8.2	9.0			
8/29/2013	2:14:48 P	504.6	12.7	303.5	8.1	8.9			
8/29/2013	2:15:48 P	504.9	12.7	303.7	8.1	8.9			
8/29/2013	2:16:48 P	504.4	12.7	303.3	8.1	8.9			
8/29/2013	2:17:48 P	504.2	12.7	303.3	8.1	8.9			
8/29/2013	2:18:48 P	504.3	12.7	303.4	8.0	8.8			
8/29/2013	2:19:48 P	503.5	12.7	303.0	8.0	8.8			
8/29/2013	2:20:48 P	502.8	12.9	301.5	7.9	8.9			
8/29/2013	2:21:48 P	504.6	12.8	303.4	8.0	8.9			
8/29/2013	2:22:48 P	504.4	12.8	303.7	8.0	8.9			
8/29/2013	2:23:48 P	505.0	12.7	303.8	8.0	8.8			
8/29/2013	2:24:48 P	503.8	12.7	303.0	7.9	8.8			
8/29/2013	2:25:48 P	505.9	12.5	304.5	7.9	8.7			
8/29/2013	2:26:48 P	506.4	12.7	304.8	7.9	8.8			
8/29/2013	2:27:48 P	507.0	12.6	305.1	7.9	8.8			
8/29/2013	2:28:48 P	506.7	12.6	304.9	7.9	8.8			
8/29/2013	2:29:48 P	507.8	12.5	305.6	7.9	8.8			
8/29/2013	2:30:48 P	508.3	12.5	306.1	7.9	8.8			
8/29/2013	2:31:48 P	505.9	12.6	304.5	7.9	8.8			
8/29/2013	2:32:48 P	508.7	12.5	306.2	7.9	8.8			
8/29/2013	2:33:48 P	508.2	12.5	305.7	7.9	8.8			
8/29/2013	2:34:48 P	508.9	12.4	306.3	7.8	8.7			

Technician signature: _____ Date: _____

**** JENKINS Test Equipment ****
Charlotte, NC - (800) 438-3003

New Equipment Sales

As one of the largest distributors of new motors and drives in Southern California we take pride in selling, and more importantly backing, the lines that we represent. As a full service motor shop we not only sell the motors but we offer everything from custom modifications, warranty service, replacement parts, and our own “Advantage Program”.

Selecting Products

We don’t take on any new equipment lines without thoroughly checking the product and the vendor. Before we represent a manufacturer we will inspect a motor from the inside out and perform the following steps before we agree to represent them.

1. We inspect the local warehouse for stock levels, warehouse staff, shipping procedures, after hours service, packaging, and storage. Motors that sit for long periods of time can result in bearing issues especially if the motors are not stored properly or are near railroad tracks.

2. We will bring a motor into our service shop and inspect the motor at every level.
   A: We start with a full voltage test of the unit and check for vibration levels, amperage readings, bearing temperature, and overall condition.
   B: We disassemble the motor and measure all bearing fits and check the balance levels of the rotor outside the motor to ensure the unit meets or exceeds the balance levels based on the RPM of the unit.
   C: We perform a full winding test that includes Hi-Pot, Surge, Micro Ohm, and Megohm test.
   D: Motor leads are checked for clear and easy to identify markings.

3. Last we make sure that they back up their product and their distributors with strong warranty and support from both local and their headquarters.

Advantage Program

Our Advantage Program, is offered at a charge on all HP ranges but is a free service if time permits on all motors 100 HP and above. When a customer purchases a 100 HP or greater motor and the customer has the time to wait a maximum of one working day we will perform a 30 minute full voltage no load test, check vibration levels, and bearing temperatures, connect and label motor to customers requested voltage, and perform a complete winding ground fault insulation and turn to turn test with a SKF® AWA Winding Analyzer.

Modifications

The most frequently performed modification, by far, is the addition of a shaft grounding ring and/or a complete shaft grounding system on new motors. With more and more motors being driven by a VFD, bearing failures resulting from bearing fluting are becoming more and more frequent. We have been successful in eliminating shaft current issues by adding ceramic insulated bearings in addition to shaft grounding rings. We also offer space heaters, RTD’s, precision balancing, and terminal box location changes, as well shaft modifications.

WEG Solutions for Drilling
Large Motors and Generators

WEG Solutions for Drilling
Large Motors and Generators

WEG Energy has the finest solutions for oil drilling applications. WEG is there with you, providing a competitive edge through enhanced technological capability and capacity for volume production. Our comprehensive motor and generator solutions can be utilized as:

Top Drive Unit
Operates the rotating drilling apparatus at the drill site. These motors are vertically oriented working on high overloads via VSD and installed in restricted space.

Draworks Unit
Hoisting unit that moves the traveling block up and down the tower. Usually driven by two horizontal motors in tandem and operated via VSD.

Mud Pumping Unit
Mud pump has a threefold purpose: lubrication and refrigeration of the drill bit and transportation of drilling debris up from the bottom of the hole. In general these motors are the same as those used on the Draworks unit.

Energy Supply
Generation of electrical power for the drilling station is achieved by direct coupled brushless generators.

WEG's contribution to these drilling applications:
- High torque capability
- Rugged, rigid mechanical structure
- Light weight design with helicopter transport in mind
- Low temperature applications - artic duty
- Tapered or spline shaft ends with tight tolerances for special coupling requirements
- Superior electrical design (VPI, Sealed Windings, Encapsulated Windings)
- Forced ventilation with elimination of water and dirt
- Space efficient frame designs
- Dimensional flexibility for drop in fitment
- Bus bar located on the terminal box
- Overload and over-speed capability
- Continuous improvement approach

What support is given to this segment?
- Quick delivery - Project demands vary rapidly with oil prices and new projects released
- One stop shop (drives, LV standard motors and switchgear)
- Global presence
- Local support hot lines and available stock for emergencies
- Competitive pricing

OIL WELL PUMPING
ODP & TEFC

These special motors have the high slip and high torque that oil well beam pumping units demand.

ODP

TEFC

- Regreasable Bearings (Frames 254T and up)
- NEMA design D (5-8% slip)
- Class F insulation (Impregnation Resin and magnet Wire are class H)
- F2 Mounted (Cast Iron frames are F1 convertible).
- Stainless Steel Nameplate - Laser etched with High contrast background (Cast Iron Frames only)
- Gasketed conduit box (TEFC only)
- Class I, Div. 2, Groups A, B, C & D – T3, Class II, Div 2, Groups F & G – T3C (TEFC Frames only)

Features that make a difference:

- Anti-Rodent screen (ODP Frames 254T and up)
- High starting and breakdown torque (NEMA Design D)
- Roller bearings for frames 404T and up

OIL WELL PUMPING – ODP & TEFC
ODP - THREE PHASE - NEMA DESIGN 'D'

HP	kW	RPM	NEMA Frame	Catalog Number	List Price	Mult. Symbol	Approx. Shipping Weight (lbs)	Service Factor	FL Amps @ High	FL. Eff (%)	"C" Dimension (in)	Voltage (V)	Notes
1.5	1.1	1200	184T	001520S3E0W184T	777	P1E	68	1.00	2.66	71.0	14.291	208-230/460	1;7
2	1.5	1200	184T	002120S3E0W184T	793	P1E	79	1.00	3.36	81.3	14.291	208-230/460	1;7;9
3	2.2	1200	213T	003120S3E0W213T	866	P1E	101	1.00	4.69	80.7	17.165	208-230/460	1;7;9
5	3.7	1200	215T	005120S3E0W215T	989	P1E	128	1.00	7.15	85.5	17.165	208-230/460	1;7;9
7.5	5.5	1200	254T	007120S3E0W254T	1,434	P1E	280	1.00	9.63	81.5	20.669	208-230/460	1;7;9
10	7.5	1200	256T	010120S3E0W256T	1,796	P1E	416	1.00	13.5	83.0	22.401	208-230/460	1;7;9
15	11	1200	284T	015120S3E0W284T	2,441	P1E	438	1.00	18.1	86.5	23.386	208-230/460	1;7;9
20	15	1200	286T	020120S3E0W286T	2,603	P1E	600	1.00	24.5	86.5	24.882	208-230/460	1;7;9
25	18.5	1200	324T	025120S3E0W324T	3,247	P1E	613	1.00	33.6	86.5	26.181	208-230/460	1;7;9
30	22	1200	326T	030120S3E0W326T	3,848	P1E	745	1.00	39.0	88.5	27.667	208-230/460	1;7;9
40	30	1200	364/5T	040120S3E0W365T	5,277	P1E	970	1.00	51.3	88.5	29.764	208-230/460	1;7;9
50	37	1200	404/5T	050120S3E0W405T	6,834	P1E	1,200	1.00	61.7	88.5	34.133	208-230/460	1;7
60	45	1200	404/5T	060120S3E0W405T	7,495	P1E	1,355	1.00	75.1	88.5	34.133	208-230/460	1;7
75	55	1200	444/5T	075120S3E0W445T	12,308	P1E	1,476	1.00	96.4	89.5	39.803	208-230/460	1;7
100	75	1200	444/5T	100120S3E0W445T	13,078	P1E	2,161	1.00	127	90.2	39.803	208-230/460	1;7

Refer to electrical and mechanical data sections for additional technical information.
Please refer to back cover for description of "NOTES".
Can't find what you are looking for? Call 1-800-ASK-4WEG (275-4934)
All data subject to change without notice

IEEE Std 841™ - 2009

WEG's IEEE841 motors are specially suited for Pulp & Paper mills, Steel mills, Petrochemical Plants and diverse demanding applications requiring severe duty long life motors.

WEG's W22 cast iron platform has an improved cooling system and solid feet for cooler operation and reduced vibration and noise extending the life of the motor.

Standard Features:

- Class F insulation (Impregnation Resin and magnet wire are class H)
- F1 Mounted (F2 convertible). Frames 447T and up can easily be F2 converted by simply rotating the terminal box Adapter.
- Stainless Steel Nameplate - Laser etched with High contrast background
- All frames with regreasable ball bearings
- Class I, Div. 2, Groups A, B, C & D – T3
- All Silicon C4 coated lamination steel 254T and larger for reliability and repairability – withstands burnout temperatures of 500°C(935°F) without loss if insulating properties. This allows the motor to be rewound back to the original efficiency.

Features that make a difference:

- 1.25 service factor up to 100 HP
- Inpro/Seal Bearing Isolators both ends
- Bearing protection exceeds IP55
- Rubber lead separator between terminal box and frame
- Vibration: 0.04 inches per second or less
- Guaranteed foot flatness to within 0.005"
- Bearing life 50,000 hours (L-10)
- Epoxy Paint system exceeds 250hrs Salt Fog test
- Interior surfaces are epoxy coated
- Non-sparking fan
- NPT Threaded terminal box
- Seamless copper lead lugs
- Seamless Stainless Steel grease extension tubes
- Automatic grease relief fiitings
- IEEE 841 Test Report in conduit box
- High Quality Silicon Steel laminations

Inverter Rated[1]:
1000:1 for variable torque
20:1 for constant torque

** Frame 586/7 250HP and up 6:1 CT and 1000:1 VT*

[1] – Winding and bearing temperatures may exceed values in standard for sinewave operation, when operated on VFD

NEMA Premium® CE APPROVED BY E 104590

Motors | Automation | Energy | Transmission & Distribution | Coatings

Explosion Proof Motors

1 - 500 HP, 2,4,6,& 8 Pole

- TEFC High Efficiency
- TEFC NEMA Premium®
- Three Phase
- Foot & Flange Mount
- UL and CSA Certification

USEP1027

Explosion Proof

Three Phase - Foot Mount and Flange Mount

WEG Explosion Proof motors are suitable for applications requiring UL or CSA certification for hazardous locations. Thermally protected with thermostats, all motors manufactured are submitted to routine testing at the factory to ensure compliance to the required specifications. WEG Explosion Proof motors are specifically designed to meet or exceed all EISA 2007 requirements for energy efficiency.

Applications

- Petroleum and gasoline
- Flour / feed mills
- Grain elevators
- Fans
- Pumps
- Blowers
- Material handling equipment
- Other applications requiring motors UL or CSA listed for hazardous locations

Optional Features

- Flange mount
- Special voltages
- Specially dimensioned shaft
- Second shaft end
- Stainless steel shaft
- Footless
- Other mounting configurations

CSA AND UL APPROVED

CSA approved - File LR 50962

Class I, Division I, groups C and D
Class II, Division I, groups F and G

UL approved - File E 87848

Temperature code T4
Frame 143T up to 326T
Class I, Division I, groups C and D
Class II, Division I, groups F and G

Frame 364T up to 586/7

Temperature code T3C
Class I, Division I, groups C and D
Class II, Division I, groups F and G*
* For group G, Service Factor 1.0

Motors | Automation | Energy | Coatings

PetroDuty™

API 541
API 547

- Tough
- Reliable
- Durable
- Quality

Our customers require motors that provide increased durability, reliability, and quality that can be utilized for services throughout the Petroleum and Petrochemical industry.

API-541 4th Edition

The PetroDuty™-541 WEG motor designs have been developed to satisfy or exceed the strict requirements set forth by the American Petroleum Institute for motors rated 500HP and larger. These motors are suitable for use in the petroleum industry services.

API-547 1st Edition

The PetroDuty™-547 WEG motor designs have been developed to satisfy or exceed the requirements set forth by the American Petroleum Institute for motors rated 250HP through 3000HP. These motors are suitable for use in general purpose petroleum or chemical applications as well as other industrial severe duty applications.

Petroleum/ Chemical Industry




BALDOR

A Better IEEE 841

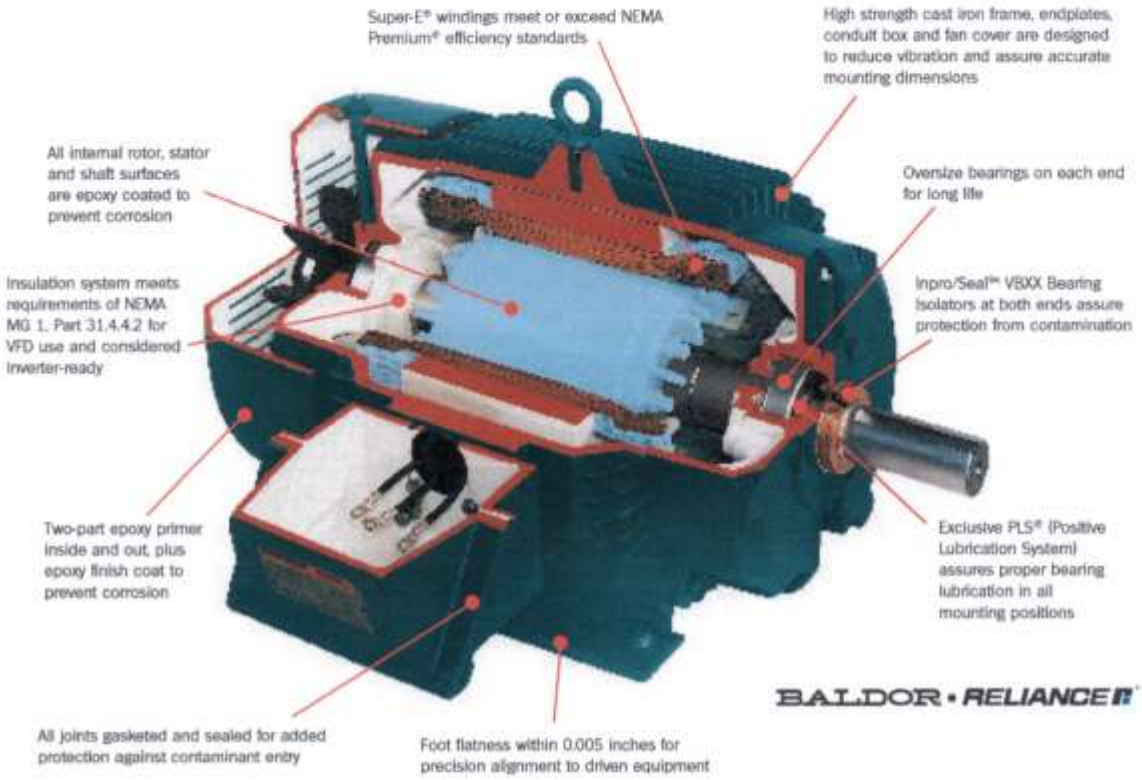

Inside and Out

Baldor•Reliance® 841XL severe duty motors are engineered and built to meet or exceed the most rigid severe duty service standards. You'll find Baldor•Reliance severe duty motors hard at work around the world in some of the most brutal conditions you can imagine, like petro-chemical, pulp & paper and mining operations.

So, no matter how you look at it, you can always count on Baldor•Reliance severe duty motors to perform under the most extreme conditions...inside and out.

Exceeds IEEE Std. 841-2009

baldor.com 479-646-4711

- Energy Efficient
- Unmatched Quality
- Superior Reliability
- Quickest Delivery Available

BALDOR

A MEMBER OF THE ABB GROUP

Printed in the U.S.A.

Baldor Explosion Proof AC and DC Motors




BALDOR®

A MEMBER OF THE ABB GROUP

841XL Motor

- 1 to 500 hp (0.75-372 kW) 841XL stock motors that meet or exceed IEEE 841-2009
- 143T thru 449T Frames
- 3600, 1800 and 1200 and 900 rpm
- 200V, 230V, 400V, 460V, 575V, 50 or 60 Hz
- 841XL meets IP56
- 841XL Super-E meets 2010 EISA requirements
- 841XL Super-E meets the requirements of NEMA MG1 Part 31.4.4.2 for VFD use and are considered Inverter Ready
- All cast iron construction including frame, end brackets, conduit box and fan cover
- Positive Lubrication System (PLS) channels grease directly into the bearing track
- Inpro/Seal™ VBXX Bearing Isolators on both ends of motor
- 5 year warranty

Super-E® Liberator

- 200-1500 hp (149 to 1100 kW)
- 449T- G400J frames (TEFC)
- 05808-05812 frames (WPII)
- 3600, 1800, 1200 rpm
- 2300/4000V, 3 phase, 60 Hz
- IP55 TEFC
- Super-E models meet 2010 EISA requirements
- Severe Duty
- 3 year warranty

661XL Air Cooled Heat Exchanger Motor

- 5-75 hp (3 to 55 kW)
- 184T- 365T frames
- 200V, 230V, 400V, 460V, 575V, 50 or 60 Hz
- IP56 TEFC
- 661XL Super-E meets 2010 EISA requirements
- Meets IEEE 661 and meets & exceeds IEEE 841-2009
- Designed for heavy belt loads, includes drive end roller bearing
- 661XL Super-E meets the requirements of NEMA MG1 Part 31.4.4.2 for VFD use and are considered Inverter Ready
- All cast iron construction including frame, end brackets, conduit box and fan cover
- Positive Lubrication System (PLS) channels grease directly into the bearing track
- Inpro/Seal™ VBXX Bearing Isolators on both ends of motor
- 5 year warranty

API 541

- 500-15000 hp (372 to 11000 kW)
- 3 phase, 50 and 60 Hz
- 2300 to 13200V
- 5000 - 10840 frames
- TEFC, TEAAC, TEWAC, WPII, WPI, DPG designs
- Variable Speed designs
- Suitable for all critical areas

Petroleum/Chemical Solutions
from BALDOR

API Standard 547 Monogram® Motor

Proven SolidSeal insulation system features a two-cycle VPI process capable of passing a water immersion test.

Oversized conduit box accommodates stress cones.

Reliance's APEX paint system provides protection from corrosive elements and UV rays.

Low-noise fan and fan cover design provides 85dba operation.

Stainless-steel hardware resists rust and corrosion.

IP55 for TEFC. WPII motors have IP55 bearing protection, which provides durable performance in harsh conditions.

Constant level oilers with sight glass provide quick visual verification of proper lubrication.

API standards for foot flatness and keeping feet in same plane assures convenient installation.

Baldor•Reliance is API Monogram 001/ Licensee #1

Developed specifically for the petroleum and chemical industry, this large AC motor is easy to specify and has features that are engineered to handle severe-duty challenges.

Advanced R&D

With Baldor's Advanced Development Laboratory, PetroChem customers can benefit from a state-of-the-art facility that offers expanded research capabilities, as well as advanced development sciences. Here, R & D experts evaluate energy efficiency, materials, magnetics, insulation, vibration, and sound - all in an effort to ensure optimun performance and reliability in every application.

Horizontal A.C. Motors
Totally Enclosed Fan Cooled, Hazardous Location Motors

Horsepower: 1/2 – 700 HP

Enclosure: Totally Enclosed Fan Cooled (TEFC), Hazardous Location Duty

Voltage: Available in 230 Volts up to 6900 Volts

Frame Sizes: 56 – 5811

Poles: 2, 4, 6 and 8

Recognition: E10336

Certification: LR13009

Label: Single and Dual, Division I and II

Product Overview and Features

U.S. MOTORS® brand totally enclosed fan cooled hazardous location motors are designed for use on pumps, compressors, fans, conveyors and tools for hazardous location applications. These motors are built to contain explosions inside the motor casing and prevent ignition outside the motor by containing sparks, flashing and explosions. Ideal for applications typically found in petroleum and chemical, industrial paint and coating, and grain processing operations.

Hazardous location motors are specifically designed for:

Petroleum and Chemical Applications

- Single Label Hazardous Location
- Division I and II, Class I, Group D
- 1.15 Service Factor
- Where flammable liquids or vapors are present

Industrial Paint and Coating Applications

- Single Label Hazardous Location
- Division I and II, Class I, Group D
- 1.15 Service Factor
- Where flammable liquids or vapors are present

Grain Processing Applications

- Dual Label Hazardous Location
- Division I and II, Class I, Group D
- Division I and II, Class II, Groups F and G
- Where combustible dusts are present
- Service Factor, Class F insulation, Class B temperature rise

Electrical and Mechanical Features:

The ALLGUARD® motor quality system featured on U.S. MOTORS® brand hazardous location motors ensures reliability, long life and superior performance. Zinc-plated hardware, regreasable ball bearings, polyurea grease and a stainless steel nameplate are standard on each motor.

Cast-iron inner bearing caps are on all motors except the 140 frame. These motors are designed to operate in ambient temperatures of 40°C, in maximum altitudes of 3,300 feet above sea level and with NEMA Design B torque-current characteristics.

- 1.0 Service Factor where combustible dusts are present; 1.15 Service Factor where flammable liquids or vapors are present
- Class B temperature rise at 1.0 Service Factor by resistance
- Class F insulation materials
- Thermal protection on dual label products
- CORRO-DUTY® corrosion protection on single label products
- Insulife 1000, consisting of one dip and bake of 100 percent solid polyester resins, on motors up to 350 HP 449 frame and below
- One cycle of 100 percent VPI solid epoxy resins on motors above 200 HP 5000 frame and higher

CORRO-DUTY®

NEMA Premium

Hazardous Location Specifications

Division I, Class I – Flammable Gases or Vapors

Hazardous locations are characterized by an atmosphere which does or may contain gas, vapor or dust in sufficient quantities to cause explosion. The National Electrical Code (NEC®) divides these locations into classes and groups according to the type of explosive agent which may be present. Listed are some of the agents in each classification. For a complete list, see NFPA (National Fire Protection Association) publication 497M.

Underwriters Laboratories (UL®) tests motors and other devices for safety in explosive atmospheres and publishes a list of motors meeting its standards for each Class and Group. Use of UL Listed devices does not necessarily make an installation conform to the NEC or local codes. Consult Chapter 5 of the NEC local building codes, OSHA requirements and insurance inspectors for detailed data on proper procedures.

Gases and vapors are grouped by severity of expected explosion pressure and extent of flame propagation between parts. For Class I applications, Nidec Motor Corporation offers hazardous location products for:

- **Group C** – ethyl-ether, ethylene and cycle propane
- **Group D** – gasoline, hexane, naptha, benzene, butane, propane, alcohol, lacquer solvent vapors and natural gas

Division I, Class II – Combustible Dusts

Dusts are grouped by combustibility, penetrability between parts, blanketing effect, ignition temperature and ability to contribute to creation of an ignition source through abrasiveness or electrical conductivity. For Class II applications, Nidec Motor Corporation offers hazardous location products for:

- **Group F** – carbon black coal or coke
- **Group G** – flour, starch or grain

Temperature

Hazardous location motors are classified by temperature code. This code indicates the maximum surface temperature for all conditions including burnout, overload, single phasing and locked rotor. The maximum surface temperature, or "T" code, must be identified on the nameplate.

All hazardous location motors have a temperature code that defines the maximum allowable frame temperature.

Maximum Temperature (For All Conditions)		
Celsius	Fahrenheit	T-Code
280*	536	T2A***
260*	500	T2B***
230**	446	T2C***
215**	419	T2D***
200**	392	T3
180**	356	T3A
165**	329	T3B
160**	320	T3C
135**	275	T4
120**	248	T4A
100**	212	T5

*Class I, Group D only, requires caution statement

**Requires thermostats

***Not applicable to motors for use in Class II locations

Options and Accessories

Following is a sampling of 4-pole, dual-label motors:

				Class, Group Available			
HP	Frame	Voltage	Winding Type	I, C	I, D	II, F	II, G
1/2–3/4	56	230/460	random-wound		X	X	X
1–2	143T–145T	230/460	random-wound		X	X	X
3–10	182T–215T	230/460	random-wound		X	X	X
15–100	254T–405T	230/460	random-wound	X	X	X	X
125–300	444T–449T	230/460	random-wound	X	X	X	X
up to 500	5807	460/575	random-wound	X	X	X	X
up to 600	5809–5811	460/575	random-wound		X	X	X
up to 150	5004	2300/4000	form-wound		X	X	X
up to 350	5008	2300/4000	form-wound		X	X	X
up to 400	5807	2300/4000	form-wound	X	X	X	X
up to 500	5809	2300/4000	form-wound	X	X	X	X
up to 800	5811	2300/4000	form-wound	X	X	X	X

Additional sizes and specifications are available and can be found in the Full Line Standard Motor Catalog (FL600) and NEMA Horizontal Custom Motor Catalog (PB202). When inquiring about motors, please have the following parameters on hand:

- Horsepower and poles
- Frequency and voltage
- Class and group of all contaminants that will or may be present in the motor's operating environment
- Temperature code defining the motor's maximum allowable frame temperature

Additional Accessories:

Nidec Motor Corporation offers the following options for U.S. MOTORS brand hazardous location motors:

- Premium efficient, energy efficient and standard efficient
- UL-listed metal breather located near the drain to allow for condensation release
- Multiple mounting configurations available for 180 frame and larger

Inverter suitable motors for Class I, Single label, temperature code T2B applications with 10:1 variable torque, 2:1 constant torque are also available.

† All marks shown within this document are properties of their respective owners.

NIDEC MOTOR CORPORATION

8050 W. Florissant Avenue | St. Louis, MO 63136
Phone: 888-637-7333 | Fax: 866-422-7758

Horizontal Titan® III Motors
Designed to API® 547 Specification

Horsepower: 250 – 1000 HP

Enclosure: Totally Enclosed Fan Cooled (TEFC)

Bearings: Standard sleeve bearings; optional anti-friction bearings

Efficiency Level: Standard High Efficient

Manufactured: Mena, Arkansas U.S.A.

Product Overview and Features

U.S. MOTORS® brand API® (American Petroleum Institute), specification 547 products, manufactured by Nidec Motor Corporation at its facility in Mena, Arkansas, are specifically designed to withstand the rigors of the petroleum, gas and chemical industries. Easy to specify, these API general purpose motors contain features required for safe, reliable operation in severe duty applications. The API endorsement on this product, via the API Monogram, symbolizes our commitment to delivering quality, value and customized solutions to our customers' motor challenges.

Nidec Motor Corporation Commitment to API 547 Standards:

Our Mena, Arkansas manufacturing facility has earned the prestigious API 547 Monogram and is certified for API Spec Q1. U.S. MOTORS brand products meeting API 547 standards are designed and built in this facility using quality methods and premium materials. The result is reliable power condensed into a compact, rugged motor.

API 547 Product Design:

Extensive design methods including computational fluid dynamics, electrical and structural finite element analysis, along with our own proprietary technologies are used to understand the design dynamics and optimize motor performance. Our engineers model stressful operating conditions to engineer-out variability in the motors' performance.

Advanced API 547 Features:

1. Easy F1 to F2 conversion with no frame change
2. Accurately placed accelerometer provisions
3. CORRO-DUTY® motors with corrosion protection and epoxy paint
4. Two grounding pads on frame
5. One frame-size down foot mounting holes provided for versatile mounting, one dowel pin hole in each mounting foot
6. Bi-directional rotation on 4-pole or slower machines
7. Spacious, oversized main conduit box for stress cones suitable for handling electrical accessories

Optional Accessories/Features:

- Auxiliary nameplate
- Copper bar rotor
- Operation in temperatures below -25°C or above 40°C
- Special shaft extension
- Operation in altitudes 3300 feet or more above sea level

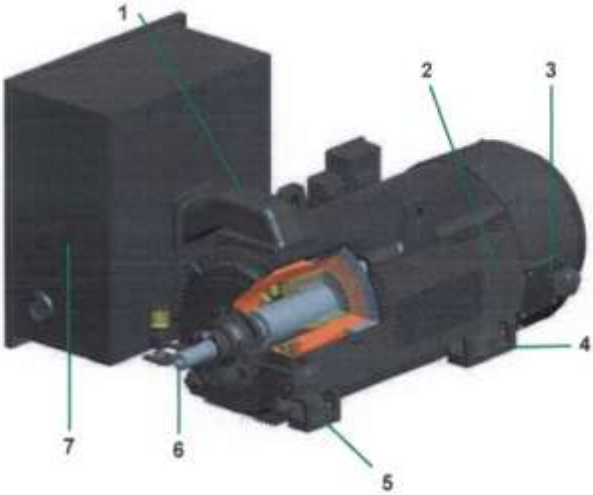

Additional API®† 547 Motor Information

Bearings

Sleeve bearings are standard; anti-friction bearings, optional. Both feature IP55 protection and electrical insulation. Sleeve bearings also feature a drive end bearing shorting device.

Vibration Detectors

Optional vibration detectors that measure housing vibration or shaft vibration are available for the Titan III. These detectors can be used on motors with sleeve or anti-friction bearings. We can supply a variety of detector choices and can accommodate customer-supplied and field-installed vibration detectors.

Shaft vibration detectors can only be used on motors with sleeve bearings. Motors can be provided with customer-specified probes and/or provisions to mount them.

Following are the API 547 motors available at 60Hz:

HP	Poles	Volts	Frame
250–700	2	2300/4000	5008–5012, 5812
250–1000	4	2300/4000	5008–5812
250–600	6	2300/4000	5008–5812
250–500	8	2300/4000	5008–5812

Motors, production equipment and materials are all tested at the Mena manufacturing facility

Testing measures:

- No-load current, power and speed
- Locked rotor current
- High potential
- Insulation resistance
- Stator resistance
- Bearing insulation
- Bearing temperature rise
- Vibration measurement
- Surge comparison test

Optional tests and inspection available:

- Complete test
- Sealed winding conformance test
- Rated rotor temperature vibration test
- Unbalance response test
- Witness tests

Nidec Motor Corporation motors meeting API 547 standards carry a two-year limited warranty when used on sine wave power that extends to a maximum of 30 months from the manufacturing date. Extended warranty is available for purchase.

† All marks shown within this document are properties of their respective owners.

NIDEC MOTOR CORPORATION

8050 W. Florissant Avenue | St. Louis, MO 63136
Phone: 888-637-7333 | Fax: 866-422-7758

841 PLUS® Motors
Horizontal A.C. Motors, Totally Enclosed Fan Cooled

Horsepower: 1 – 400 HP

Frame Sizes: 143 – 449

Pole Designs: 2, 4, 6, 8

Design Voltages: 460 and 575 Volts at 60 Hz

Requirements: Meets or exceeds Energy Independence and Security Act of 2007 (EISA);
Meets or exceeds IEEE 841 Standard-2009;
Meets vibration requirements of GM7E-TA

Warranty: 5-year limited warranty

Product Overview and Options

Designed to exceed the industry's most stringent IEEE 841 standards, the U.S. MOTORS® brand 841 PLUS® motors are commonly used in severe duty environments for pumps, compressors, fans, blowers, and other material processing applications. These rugged motors are ideal for constant speed or inverter duty applications typically found in the petroleum, chemical, pulp and paper, wastewater, automotive and mining industries.

U.S. MOTORS brand 841 PLUS motors are rated NEMA Premium® efficient. Low-loss silicone steel construction and streamlined design enables the motor to operate at lower temperatures resulting in lower energy costs. This motor is designed to operate in ambient temperatures of -30°C to 40°C, in altitudes of up to 1,000 meters above sea level and with NEMA Design B torque-current characteristics. Inertia-load acceleration capabilities for the 841 Plus motor meet the stringent requirements of NEMA MG 1-2009, Section 12.54.

Product Features:

- NEMA Premium® efficient
- 1.15 Service Factor on sine wave power; 1.0 Service Factor on Inverter Duty
- Class B temperature rise at 1.0 Service Factor by resistance with sine wave power
- Class F insulation materials to increase motor life
- Exceeds NEMA MG1 Part 31 Inverter Duty
- Polyurea grease
- Stainless-steel nameplate
- Variable frequency drive or full voltage, across-the-line starting
- Ground on frame
- Division 2 suitable per NEC article 500 (NFPA 70)
- AFBMA bearing numbers on nameplate
- Protective coating on each rotor and shaft from bearing journal to bearing journal

Inverter Duty

Nidec Motor Corporation's patented inverter grade insulation system allows the U.S. MOTORS brand 841 PLUS motor to withstand spike and transient voltages induced by insulated bipolar gate transistor drives, making it fully compliant with NEMA MG-1, Part 31. This is made possible through:

- Pulse-resistant magnetic wire that provides protection against high-voltage spikes
- Additional lacing on the end turns improve coil rigidity
- Multiple bake cycles to help prevent coil-to-coil circuits
- Phase paper to help prevent phase-to-phase arcs
- Adjustable frequency of 5:1 constant torque or 10:1 variable torque for the full product line.

841 PLUS®

NEMA Premium

Product Overview and Options *continued*

Typical 841 PLUS® Motor Construction:

1. Corrosion resistant zinc dichromate-plated hardware
2. Heavy duty cast-iron enclosure for long life and reduced vibration
3. Inverter grade insulation
4. Inpro/Seal™ "VBXX" on both ends provides IP56 protection and prolongs motor life by shielding bearings from contaminants in even the harshest environments
5. Special shaft runout of 0.0010 inches for motors 200 HP and less; runout of 0.0015 inches for motors with 250 HP and up
6. Same size oversized bearings on each end. Cast iron inner bearing caps
7. Brass breather drains
8. Oversized, double-gasketed and rotatable conduit box to protect against contaminants and correctly position non-braided, non-wicking motor leads
9. Foot flatness machined to within 0.005 inch tolerance ensures easy installation and proper alignment
10. Corrosion-resistant mill and chemical duty paint capable of withstanding a 250-hour salt spray test

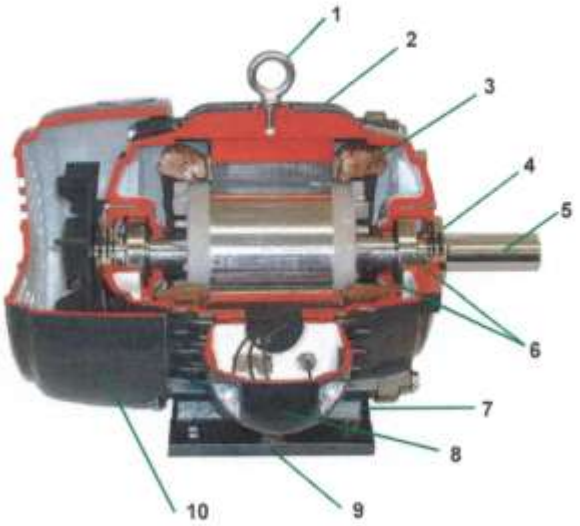

Options and Accessories

Nidec Motor Corporation offers the following custom-design options on the U.S. MOTORS brand 841 PLUS motor:

- SKF CARB™ roller bearings where applicable
- Horizontal or vertical mounting
- Vibration detectors
- Sealed insulation treatments, available on form wound, medium voltage motors above 200 HP, to help shield motor windings
- Winding and bearing thermal protection for motors 250 HP and up
- Inpro/Seal™ MGS grounding shaft rings
- API 661 Duty

Stock Motors

- 1–400 HP
- 2, 4, 6 pole designs
- 460 and 575 Volts
- Constant or variable torque
- 1–10 HP C-Face Footless

Custom and Conversion Motors

- 1–500 HP
- 2, 4, 6, 8 pole designs
- 200, 230, 460, 575, 2300, 4000 Volts
- Constant or variable torque
- C & D flange kits available 140 – 440 frame

Testing and Inspection

Nidec Motor Corporation conducts extensive testing and inspections on each of its U.S. MOTORS brand 841 PLUS motors.

- No load current, power and speed
- High-potential test on stator windings
- Insulation resistance test by megohmeter and polarization index
- Precision balanced to typical vibration levels of less than 0.05 inches per second
- Optional complete test, including full load test

For additional information, please refer to our Full Line Standard Motor Catalog (FL600) or contact your Nidec Motor Corporation representative.

† All marks shown within this document are properties of their respective owners.

NIDEC MOTOR CORPORATION

8050 W. Florissant Avenue | St. Louis, MO 63136
Phone: 888-637-7333 | Fax: 866-422-7758

Solid Shaft Motors
Vertical A.C. Motors, High Thrust

Horsepower: 3 – 5000 HP

Speeds: 3600 – 400 RPM

Design Voltages: 3 Phase/200-6900 Vac/50 or 60 Hz

Enclosures: Weather Protected Type I, Weather Protected Type II, Totally Enclosed Fan Cooled, and Hazardous Location

Frame Sizes: 182-9608

Product Overview and Options

More than 100 years of vertical motor design experience ensures U.S. MOTORS® brand solid shaft high-thrust motors satisfy the requirements for water/wastewater treatment industry use. These motors are constructed of high quality materials and are manufactured in a state-of-the-art, ISO9000-2000 facility.

Product Features:

- Class F insulation, Class B rise at full load
- 1.15 Service Factor - typical for WPI and WPII enclosures
- Service Factor - typical for TEFC and hazardous location enclosures

Options:

- Specific ambient temperatures
- Balanced to meet API 541 Fourth Edition specifications

Vertical Solid Shaft High Thrust Motor

Upgrades

Inverter Duty – Premium efficiency coupled with an Inverter Grade® insulation system provide performance and reliability on sine wave or pulse-width modified variable frequency drive inverter power. The insulation system delivers superior pulse endurance to withstand waveform stresses produced by pulse width modulated drives.

- Pulse resistant magnetic wire
- Additional lacing on end turns

CORRO-DUTY® Motors – Additional features for harsh environments

- Cast-iron construction
- Internal and external corrosion resistant treatments

Product Overview and Options *continued*

Typical Solid Shaft Motor Construction:

1. Optional Cooling Coils
2. Bearing Temperature Probe Provision
3. Oil Sight Glass
4. Oversize Oil Sump
5. Oil Sight Glass
6. Bearing Temperature Probe Provision
7. Oil Drain
8. Heavy Steel or Cast Iron Fan Cover Guard
9. Precision Bearings (Multiple Options)
10. Rugged Cast Iron Frame, Brackets
11. Multiple Conduit Box Options

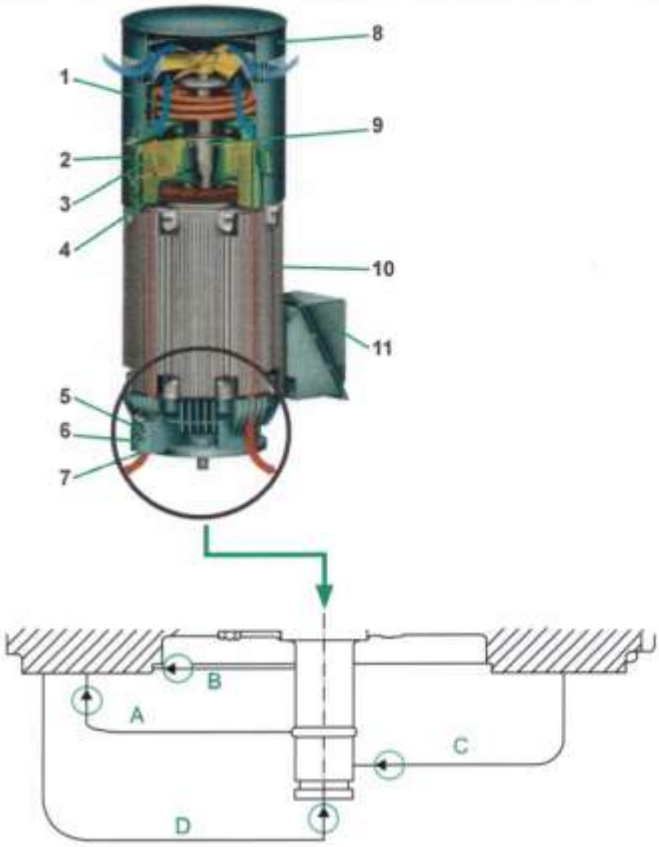

KEY

A. Face Runout (0.001 in max tolerance)
B. Register Runout (0.004 in max tolerance)
C. Shaft Runout (0.001 in max tolerance)
D. End Play (0.005 in max tolerance)

Enclosure and Warranty Information

Standard efficient – 12 month limited warranty from the date of installation or 18 months from the date of manufacture, whichever comes first.*

Energy efficient – 24 month limited warranty from the date of installation or 30 months from the date of manufacture, whichever comes first.*

Premium efficient – including Inverter Duty – 36 month limited warranty from the date of installation or 42 months from the date of manufacture, whichever comes first.*

† All marks shown within this document are properties of their respective owners.
**For details, refer to: http//www.usmotors.com/FL600/Limited Warranty.pdf*

NIDEC MOTOR CORPORATION

8050 W. Florissant Avenue | St. Louis, MO 63136
Phone: 888-637-7333 | Fax: 866-422-7758

HOLLOSHAFT® Motors
Vertical A.C. Motors, High Thrust

Horsepower: 3 – 5000 HP

Speeds: 3600 – 400 RPM

Design Voltages: Three Phase/208-6900 Vac/50 or 60 Hz

Enclosures: Weather Protected Type I, Weather Protected Type II, Totally Enclosed Fan Cooled, and Hazardous Location

Efficiency Levels: Standard Efficient, Energy Efficient, and Premium Efficient

Product Overview and Options

The U.S. MOTORS® brand Vertical HOLLOSHAFT® motor has been a standard in the pumping industry since 1922. These motors are recognized for their longevity, reliability and ease of use. Unique configurations, tailored to a customer's specific requirements, can include enclosure design to minimize the effects of adverse conditions present in turbine, mix flow and propeller pump applications.

U.S. MOTORS® brand Vertical HOLLOSHAFT® motors are constructed of high quality materials and are manufactured in a state-of-the-art, ISO9000-2000 facility. Innovative, performance-focused design makes this motor the most trusted in the industry.

Product Features:

- Class F insulation, Class B rise at full load
- 1.15 Service Factor - typical for WPI and WPII enclosures
- 1.00 Service Factor - typical for TEFC and hazardous location enclosures
- Maximum 40°C ambient, 3,300 feet altitude
- Bearing capacities among highest in industry
- Multiple bearing configurations available for specific bearing life requirements.
  - Ball
  - Spherical Roller
  - Angular Contact
  - Plate Type

WPI 15-4000 HP
and WPII 300-5000 HP

Typical HOLLOSHAFT® Motor Construction:

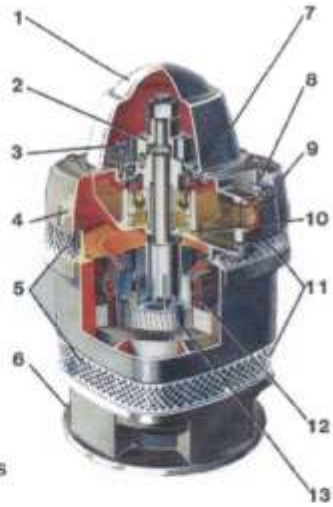

1. **Lightweight Top Cover**
2. **Coupling** is readily accessible
3. **Lockbar** holds shaft during adjustments
4. **Lifting Lugs** positioned for stability
5. **Protected Air Openings** exceed NEMA WPI requirements
6. **Precision Machined Mounting Base,** ample clearance for mounting bolt installation
7. **Rugged Bearing** withstands heavy load thrusts
8. **Large Plug** simplifies oil fills
9. **Sight Gauge Window** for quick oil level reading
10. **Metered Oil Flow** minimizes churning
11. **Dual Air Flow** system for uniform cooling of motor top and bottom
12. **Windings** Protected by new, synthetic materials
13. **Solid Die Cast Rotor** with integral fan blades

Enclosure Types

Non-Reverse Backstop Ratchet Design, BALL-O-MATIC®

- First technology of its kind in the market
- Prevents reverse rotation within 4.5 degrees of rotation
- Unlimited depth setting
- Can be used in certain Hazardous Location applications

BALL-O-MATIC® Backstop Ratchet

Weather Protected Type I (WPI)

Constructed to minimize the entrance of rain, snow and airborne particles. Enclosures exceed NEMA requirements. The ventilation system is designed to provide optimum cooling to the thrust bearing and electrical components and is available in all motor sizes.

Weather Protected Type II (WPII)

Enclosure offers protection against hostile outdoor environments. The special ventilation system minimizes the entrance of high velocity air, moisture and airborne particles into the motor's passages.

Unique design allows the use of standard internal components. Special enclosures can be adapted with minimum delay.

Totally Enclosed Fan Cooled (TEFC) and Hazardous Location

Non-sparking, non-reverse ratchet design. Available for severe environments where destructive dusts, vapors and other harmful substances are found. Perfect for use in hazardous locations where Underwriters Laboratories (UL®†) approval is necessary.

CORRO-DUTY™

Cast iron CORRO-DUTY® motors are available with external corrosion-resistant paint and hardware for extremely harsh environments.

TEFC and Hazardous Location 3-700 HP

4 Zone Design

U.S. MOTORS® brand vertical pump motors are designed with four functional zones. This design ensures easy installation and service and provides operator protection and convenience.

ZONE 1

Canopy cap allows easy access to the coupling, non-reverse ratchet and thrust bearing.

ZONE 2

Thrust bearings, generously sized oil reservoir, and large weather-protected air intake for continuous cooling to the motor and thrust bearings.

ZONE 3

Winding section develops the driving torque and houses the insulation systems.

ZONE 4

Compact mounting base designed for momentary upthrusts of the pump.

WPI 15-4000 HP and WPII 300-5000 HP

† All marks shown within this document are properties of their respective owners.

NIDEC MOTOR CORPORATION

8050 W. Florissant Avenue | St. Louis, MO 63136
Phone: 888-637-7333 | Fax: 866-422-7758

E&L ELECTRIC MOTORS

Electric Motor & Generator Rebuilding & Rewinding

TEL (562) 903-9272

Repairs: AC & DC Motors - Pumps - Gear Boxes - Servo Motors

- *AC & DC Motor & Generator Rebuilding and Rewinding*
- *Synchronous Motor Rebuilding & Rewinding*
- *Explosion Proof—UL® Listed Rebuilding & Rewinding—UL® # E350540*
- *Pump Rebuilding With Pressure Testing—Gear Box Rebuilding*
- *Hermetic Motor Rebuilding & Rewinding*
- *Brushless Servo & Spindle Motor Repair & Feedback Testing*
- *Computerized Balance, Core Loss, and Motor Analyzer*
- *Full Machine Shop Services*

New Sales: Motors - Drives - Carbon Brushes - Reducers

- *New & Rebuilt Motors In Stock In Santa Fe Springs With 24/7 Service*
- *Authorized Service & Warranty Center For Most Major Manufactures*
- *New Motor Modifications Including Full Machine Shop Capabilities*
- *Carbon Brushes - Over 200 Part Numbers In Stock*

State Of The Art Computerized Testing & Repair Upgrades

- *2013 Jenkins® 4160 Volt Computerized Motor Test Center With Temperature & Vibration Sensors & Full Report Capabilities*
- *2011 Baker® Computerized 12000 Volt Motor Analyzer*
- *2011 Lexseco® Computerized Core Loss Tester*
- *2011 Dyna-Bal® Computerized Balancer*
- *2011 Stingray® Parts Washer*
- *2012 Steelman® Process Oven With 24 Hr Chart Recorder*

24 Hour Service— 365 Days a Year




E & L Electric, Inc
12322 Los Nietos Road - Santa Fe Springs, CA 90670
TEL (562) 903-9272 SALES@EANDLELECTRIC.COM

E&L ELECTRIC MOTORS

Electric Motor & Generator Repair & Rewinding

Facility Capabilities

Hours Of Operation
- Office Monday—Friday 7:30—5:00 PM
- 24 Hour New & Repair Service Available

Facility
- Shop: 8000 Sq. Ft
- Office:2000 Sq. Ft
- Yard & Storage: 32,000 Sq Ft
- Networked Computerized Control System

Logistics
- Truck # 1: 6 Ton Flat Bed
- Truck # 2: 3 Ton Flat Bed

- UPS: Same Day Orders In By 4:00 PM
- Delivery: Local Pick Up & Delivery

- Pick Up & Delivery Service

Warranty
- Up to 3 Years Parts & Labor on Repairs
- Up To 5 Years On New Motors

UL Listed
- UL Listed to Rewind & Rebuild Explosion Proof Motors — UL # E350540

General Rebuild Equipment
- Automatic Motor/Parts Washer

Material
- Inverter Duty 200c Magnet Wire
- Nomex® Insulation

Lifting Capacity
- 1-15 Ton

Lathe
- 24” Swing x 60” Bed
- 45” Swing x 80” Bed

Mill Machine
- Bridgeport 40” / Up to 8” Bore

Electronic Balance
- 2011 Computerized Dyna-Bal® Precision Balancing Capable Of API Standard Balance Levels

Burn Off Furnace
- Bayco® Controlled Temperature W/ Pre & Post Core Loss Testing

Bake Oven
- 2012 Steelman® Gas 7x7x7 With Partlow Controls, Lo-Nox Burners and Chart Recorder

Core Loss
- 2011 Lexseco ® Computerized Core Loss Tester & Data Verification

Test Center
- 2013 Jenkins® Computerized Motor Test Center W/ Vibration Analysis & Temperature Probes
- 2011 Baker® AWA-12K Motor Analyzer

Training Center
- Monthly In House Training Seminars
- Customer Specific Seminars

24 Hour Service— 365 Days a Year





E & L Electric, Inc
12322 Los Nietos Road - Santa Fe Springs, CA 90670
TEL (562) 903-9272 SALES@EANDLELECTRIC.COM